UniFi® Access Hub

ui.com/install

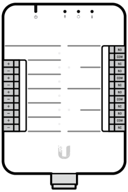

a

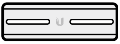

b

c

M4

d

1

ui.com/install

A

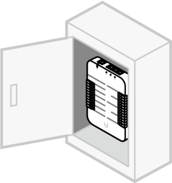

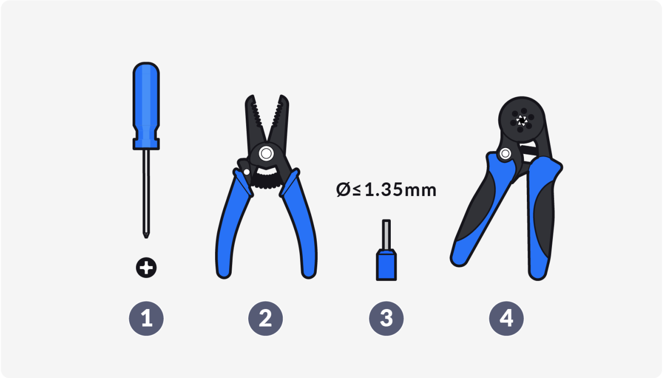
Ø≤1.35mm
1
2
3
4

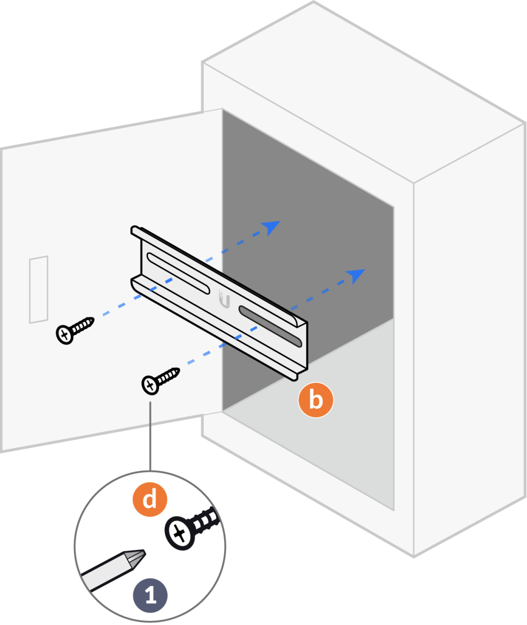

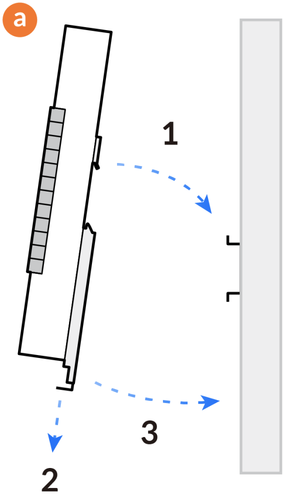

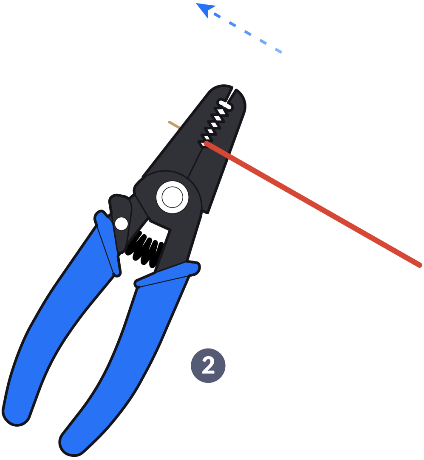

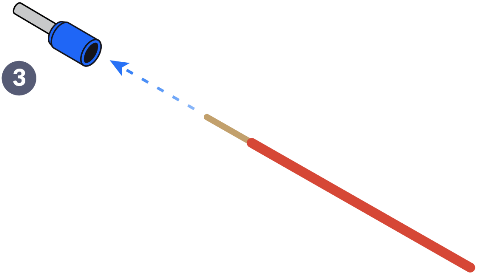

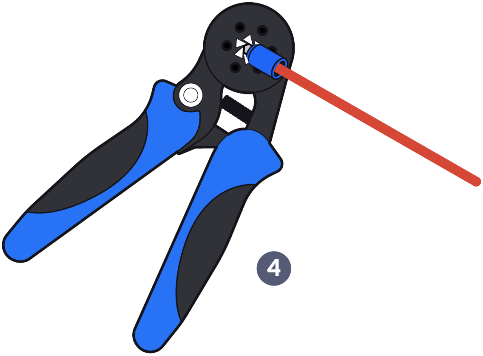

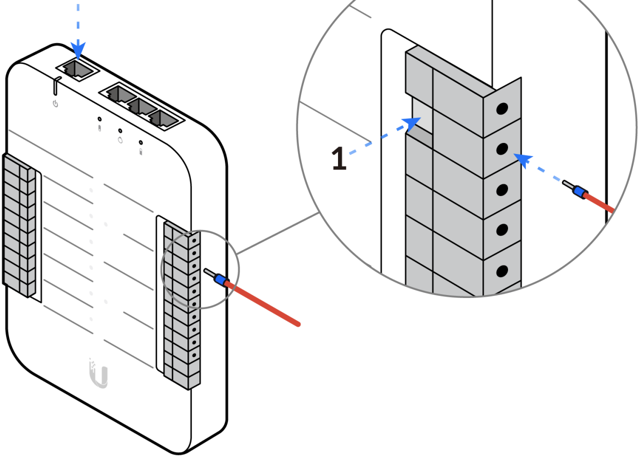

B

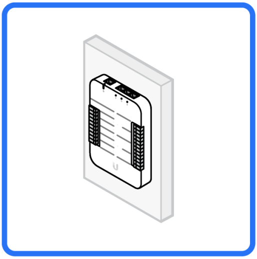

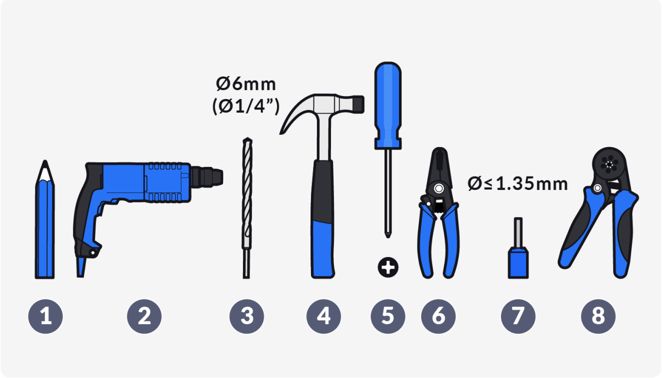
Ø6mm
(Ø1/4")
Ø≤1.35mm
1
2
3
4
5
6
7
8

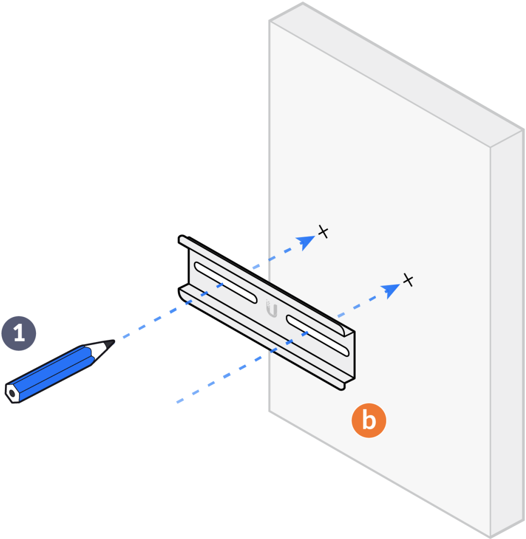

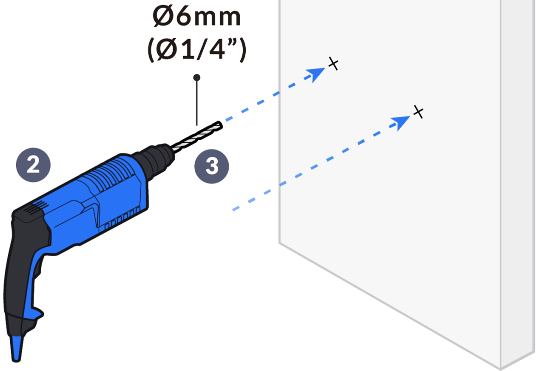

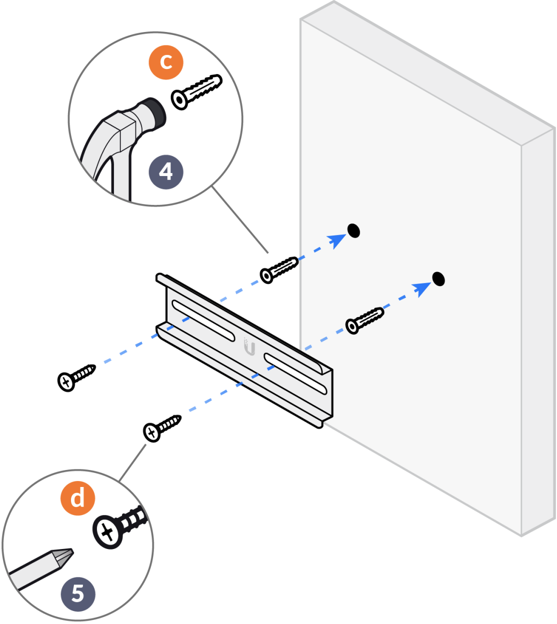

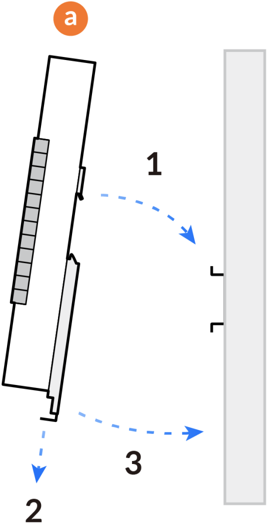

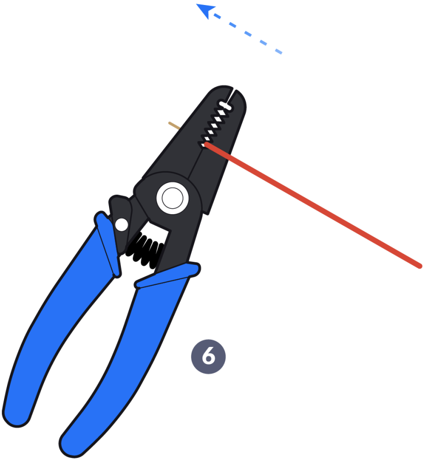

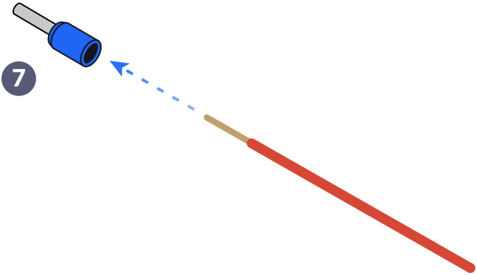

7

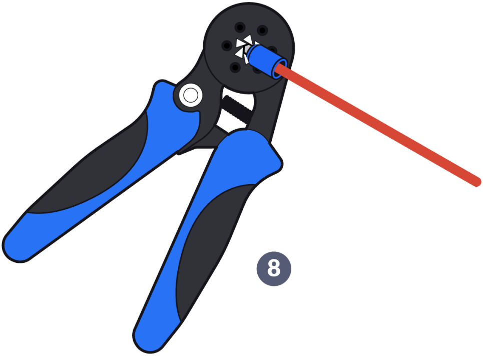

8

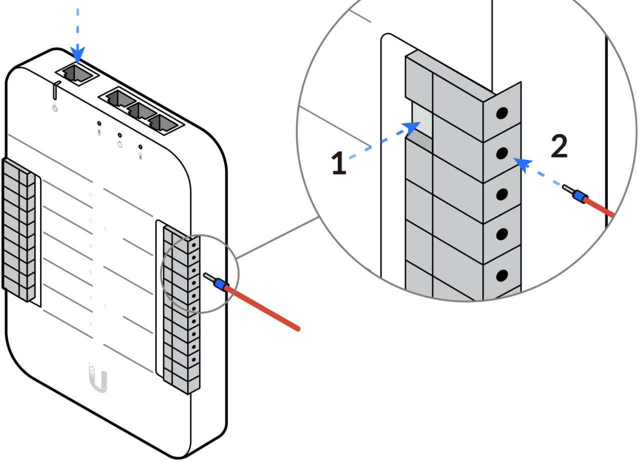

2

ui.com/install

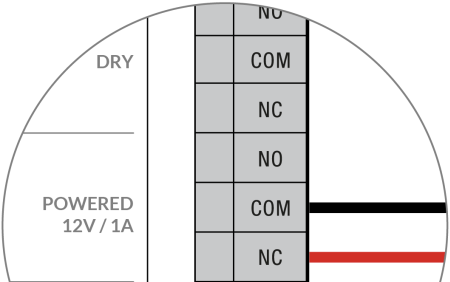
NO
DRY
COM
NC
NO
POWERED
12V / 1A
COM
NC

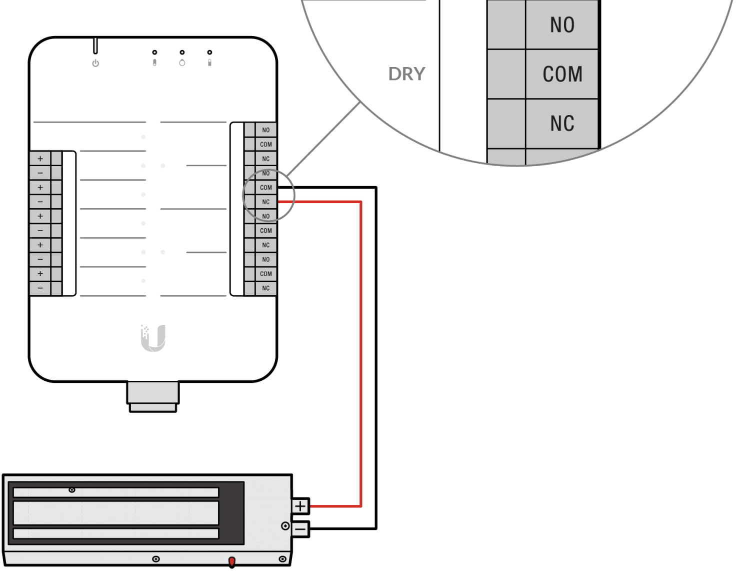
DRY
NO
COM
NC
NO
COM
NC
NO
COM
NC
NO
COM
NC
NO
COM
NC
+
−
+
−
+
−
+
−
+
−
+
−

Fail-Safe Lock

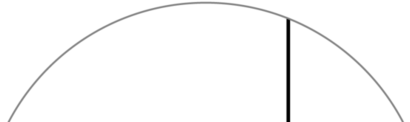

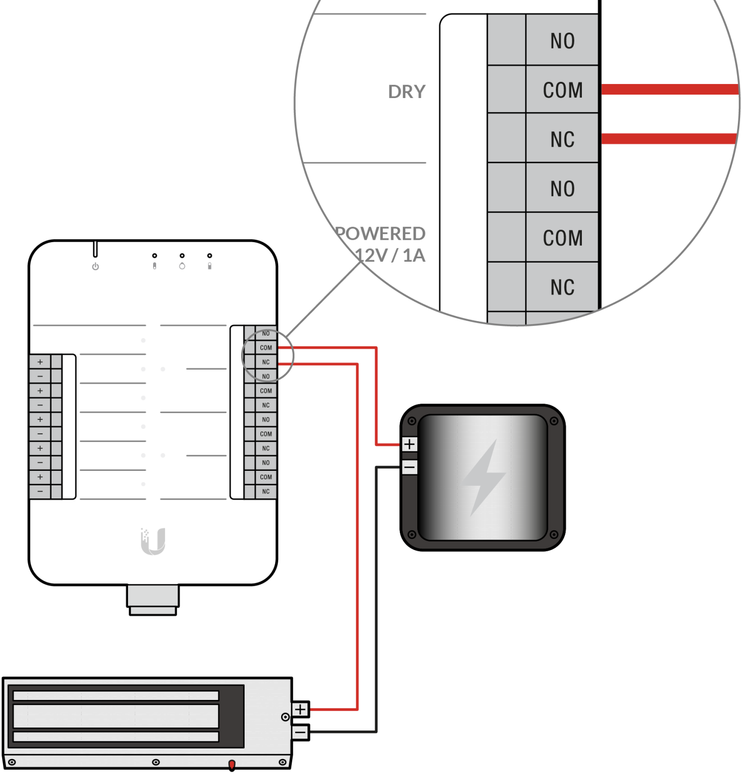
DRY
POWERED
12V / 1A
NO
COM
NC
NO
COM
NC
+
−
+
−

Fail-Safe Lock

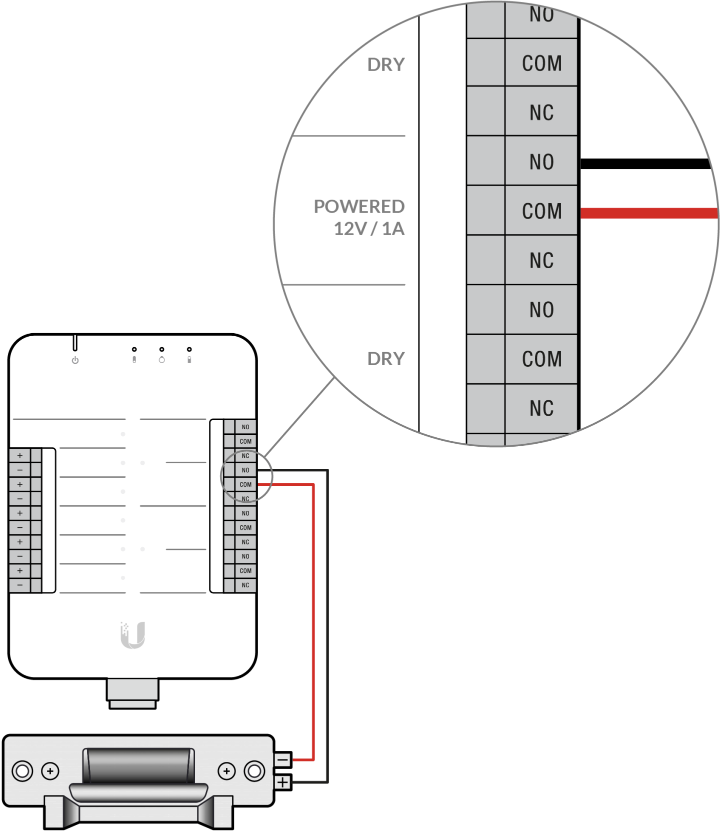
DRY
POWERED
12V / 1A
DRY
NO
COM
NC
NO
COM
NC
NO
COM
NC
+
−

Fail-Secure Lock

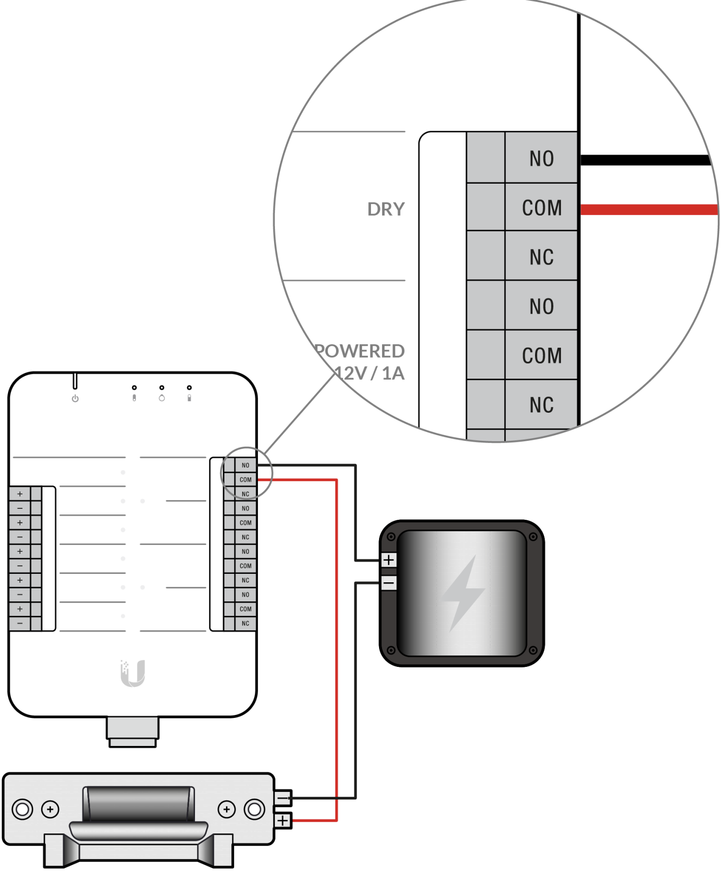
DRY
POWERED
12V / 1A
NO
COM
NC
NO
COM
NC
+
−
+
−

Fail-Secure Lock

Push Button

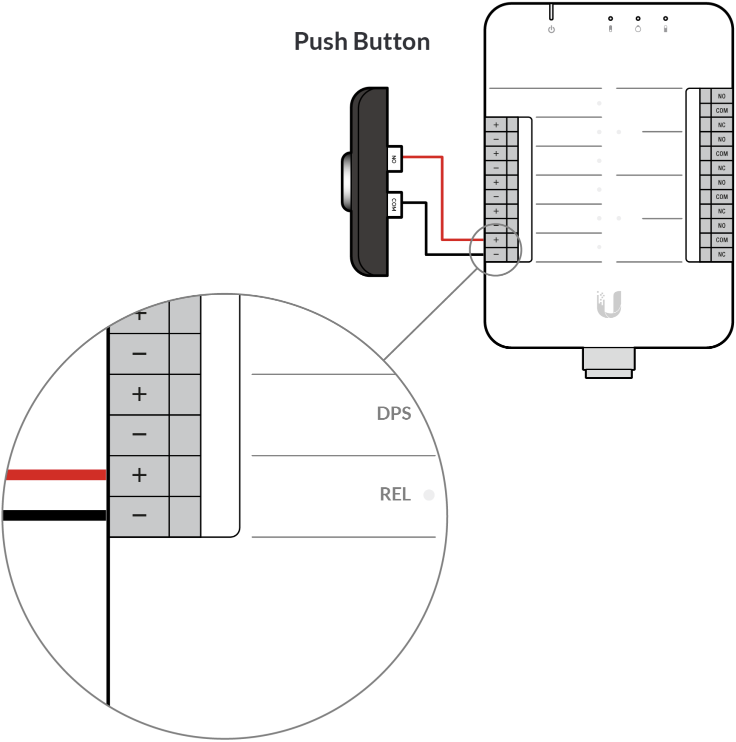
NO
COM
+
−
NO
COM
NC
DPS
REL

Door Position Switch (Door Sensor)

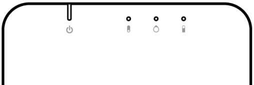

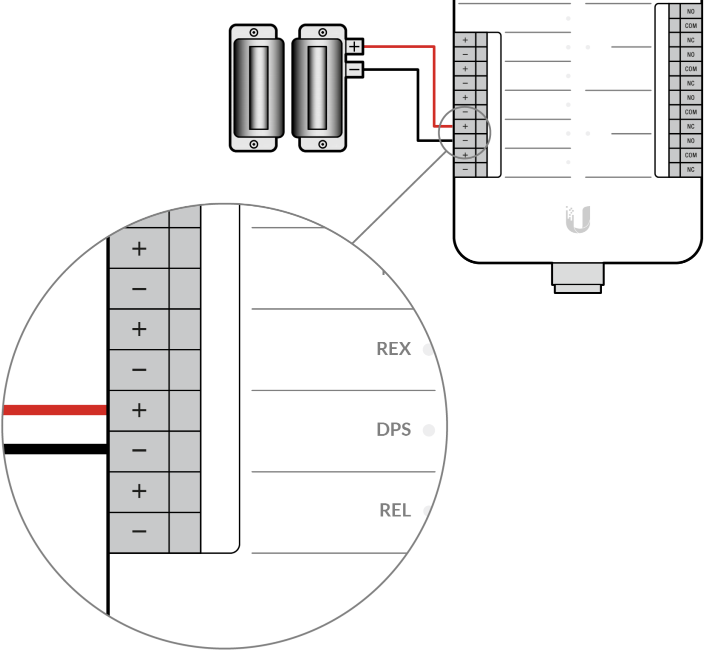
+
−
NO
COM
NC
REX
DPS
REL

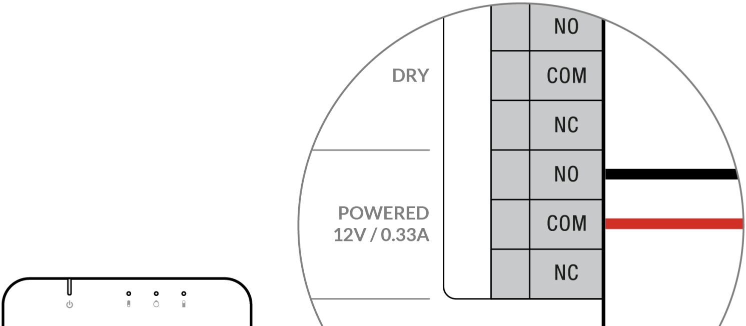
DRY
NO
COM
NC
POWERED
12V / 0.33A
NO
COM
NC

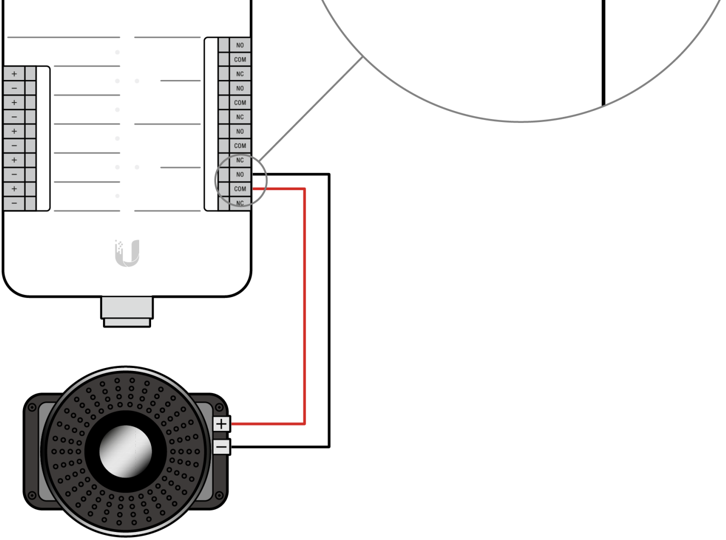
+
−
+
−
+
−
+
−
+
−
NO
COM
NC
NO
COM
NC
NO
COM
NC
NO
COM
NC
+
−

Siren

Motion Sensor

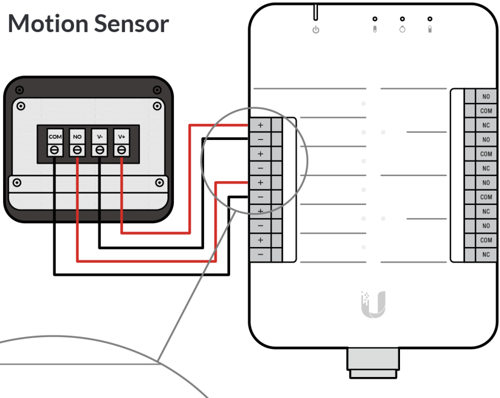
COM
NO
V-
V+
+
−
+
−
+
−
+
−
+
−
NO
COM
NC
NO
COM
NC
NO
COM
NC
NO
COM
NC

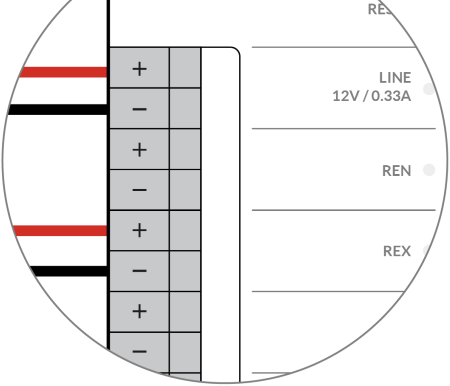
RE
LINE
12V / 0.33A
REN
REX
+
−
+
−
+
−
+
−

3

ui.com/install

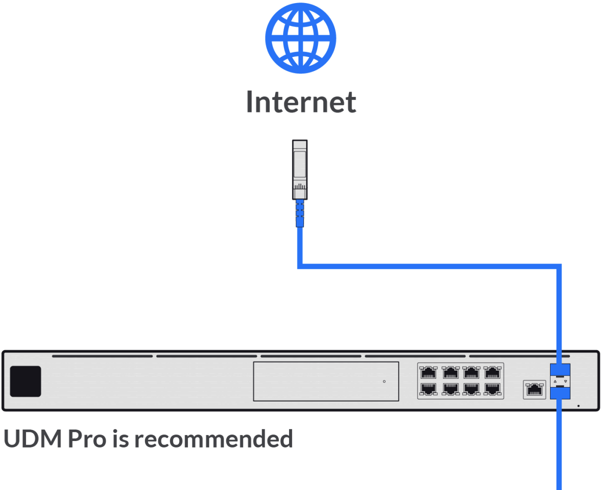

UDM Pro is recommended

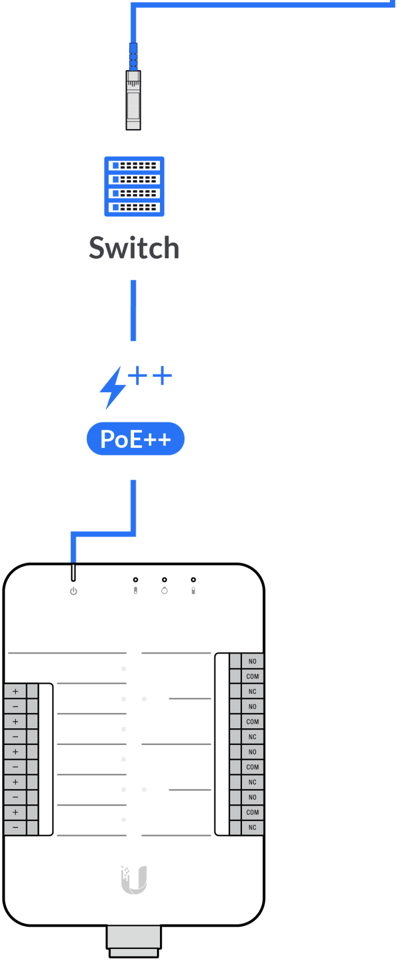
Switch
PoE++
NO
COM
NC
NO
COM
NC
NO
COM
NC
NO
COM
NC
+
−
+
−
+
−
+
−
+
−

4

ui.com/install

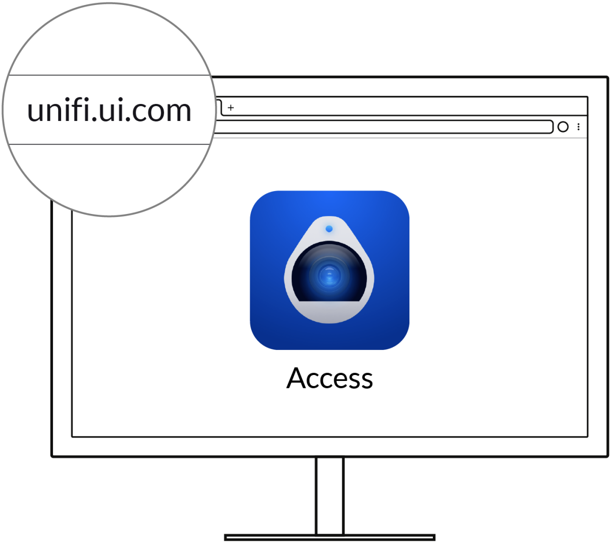
unifi.ui.com
Access

Installation Video

🔗

Get Answers
help.ui.com

UI Support

🔗

©2021 Ubiquiti Inc. All rights reserved. Ubiquiti, Ubiquiti Networks, the Ubiquiti U logo, UniFi, and AirFiber are trademarks or registered trademarks of Ubiquiti Inc. in the United States and in the United States and in other countries. Apple and the Apple logo are trademarks of Apple Inc., registered in the U.S. and other countries. App Store and the Apple logo are trademarks of Apple Inc., registered in the U.S. and other countries. Android, Google, Google Play, the Google Play logo and other marks are trademarks of Google LLC. All other trademarks are the property of their respective owners.